UNIVERSITÀ degli STUDI di CATANIA

DIPARTIMENTO di INGEGNERIA ELETTRICA ELETTRONICA e INFORMATICA

life.augmented

Integrated Airborne Particle Matter Detector

Ph.D Brainstorming Day
October 29th 2019

Ph.D Student: *Ferlito Umberto*

Tutors: *Prof. Ing. A.D.Grasso*
Ing. M.Vaiana
Ing. G.Bruno

PARTICULATE MATTER IMPACT ON HEALT

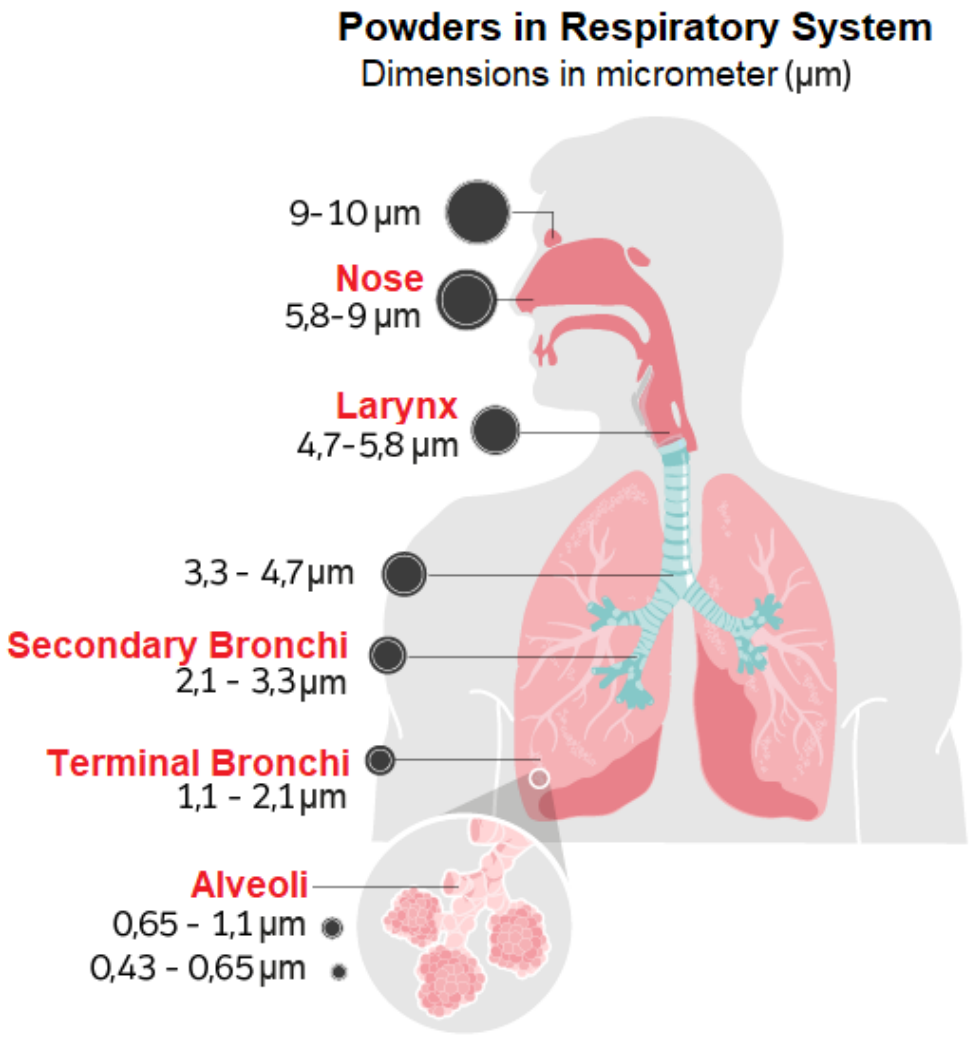

Atmospheric particulate matter (PM) is a category of airborne pollutants that includes dust, tobacco smoke, diesel exhaust, and other primary sources. Fine particles that have a diameter of 10 µm (PM_{10}) and 2.5 µm ($PM_{2.5}$) represent a threat for human health because of their ability to penetrate deep into the respiratory system → Exposure to PM_{10} and $PM_{2.5}$ has been linked to a reduction of the life expectancy between 8 and 36 months

ACTUAL PARTICULATE MATTER SENSORS

- Conventional methods to monitor PM concentration are based on gravimetric or laser scattering detection methods → Bulky and costly and don't allow appropriate spatiotemporal resolution
- Solution exploiting high-resolution capacitive sensor has been proposed but it relies on static sensing of a particles deposited on interdigitated electrodes, thus it is not suitable for real time detection of in-flow particles since the electrodes must be cleaned after every measurement

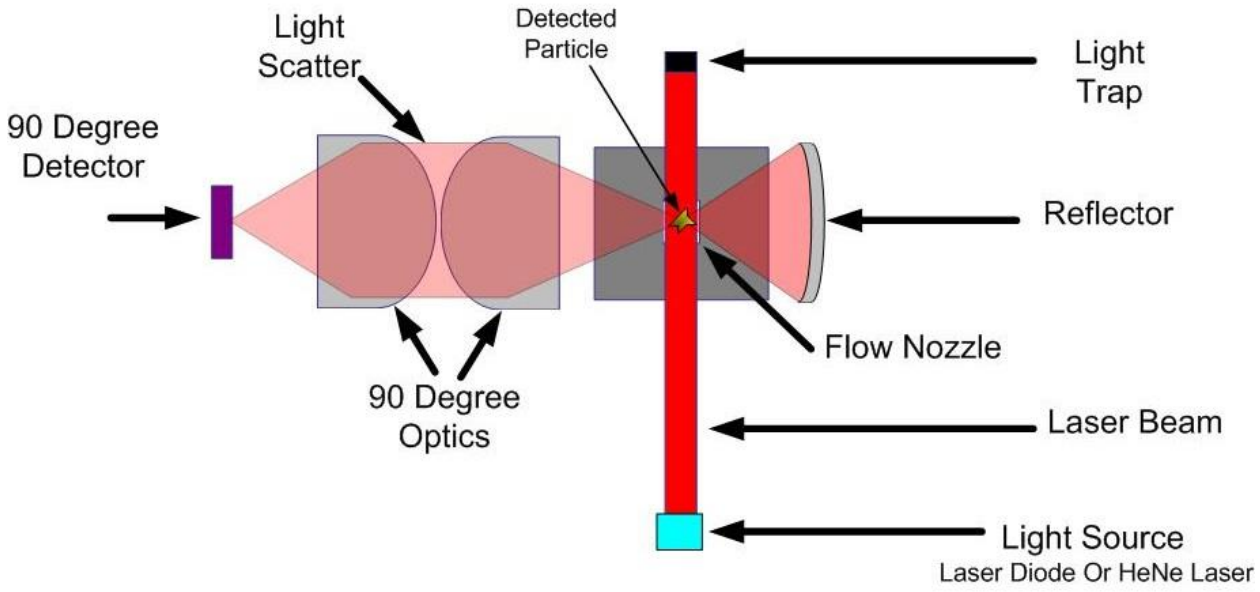

The aim of the research project is the design of an integrated airborne particle matter detector that exploits capacitive sensing to detect PM flowing in a channel

SENSING PART SCHEME

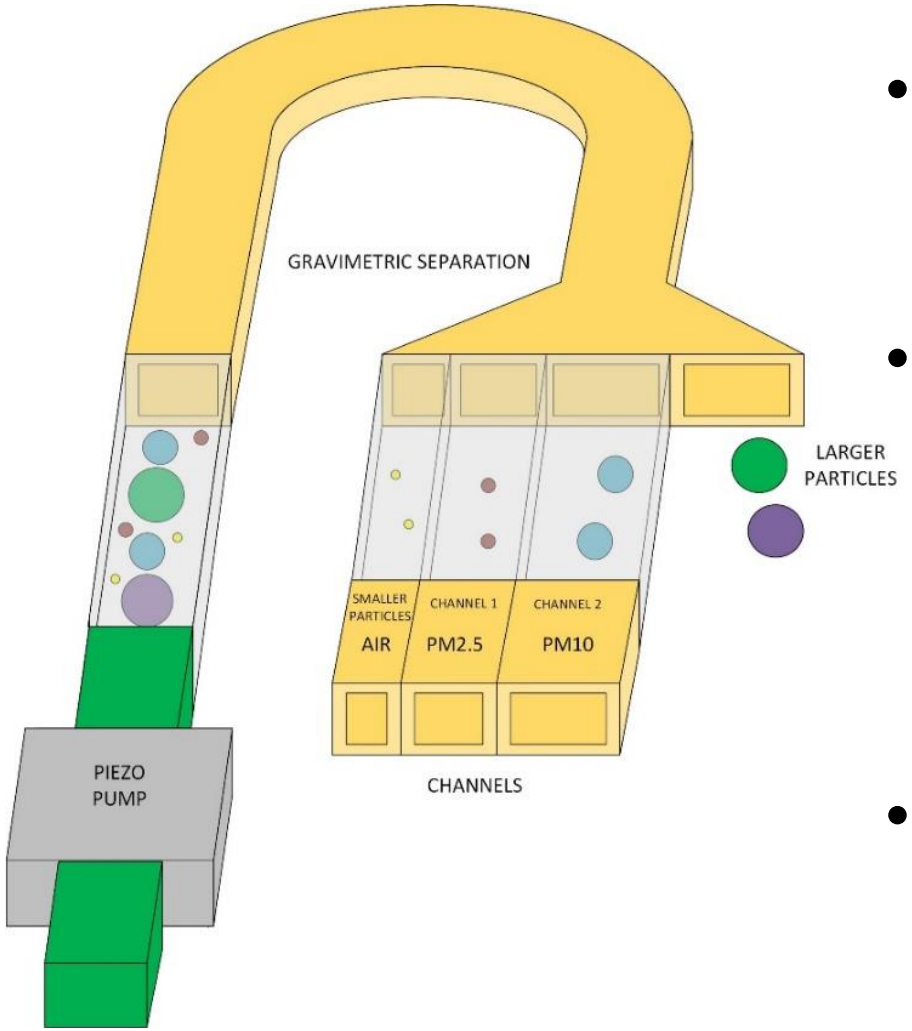

- A microfluidic channel that allows separating the PM according to their diameter exploiting centrifugal effect
- The electronic readout section made up by three different solid-state sensing channels (one for PM10, one for PM2.5 and the last one for reference
- Two different configurations of the sensing electrodes: parallel-plate and planar or interdigitated

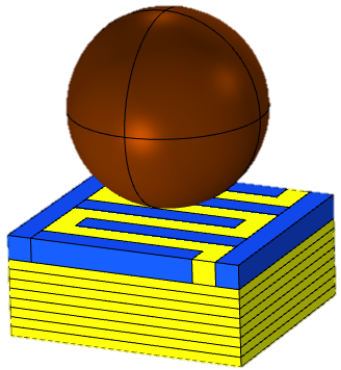

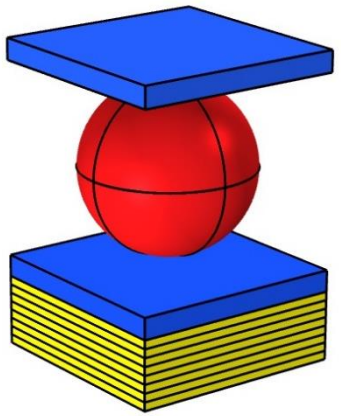

A COMPARISON BETWEEN SENSING CAPACITORS

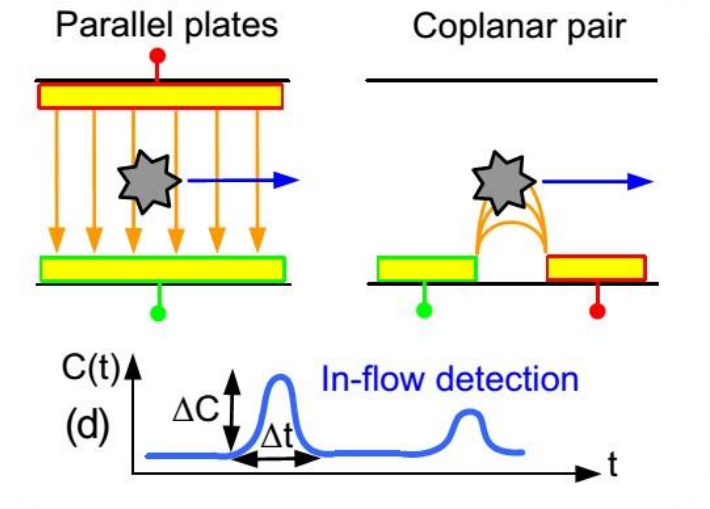

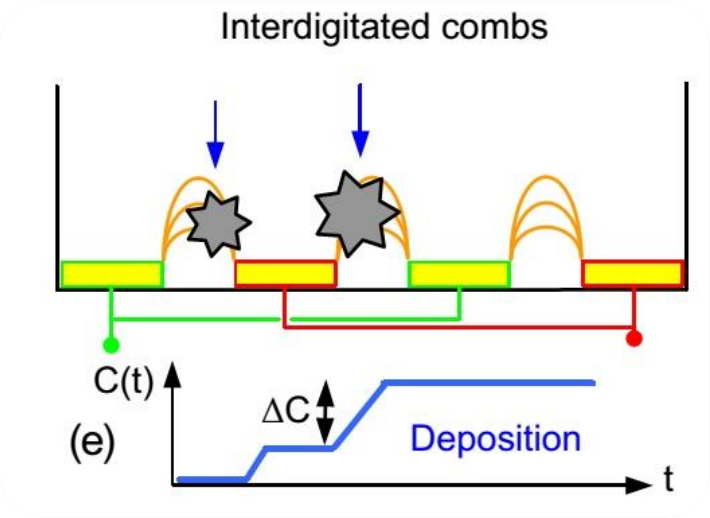

- Preliminary simulations in COMSOL reveal that the parallel-plate configuration leads to a higher capacitance variation
- A 8-µm Teflon particle (ε_r=8.8) leads to a capacitance variation lower than 10 aF for the coplanar configuration
- Variation in the order of tens of atto Farad in the parallel plate configuration
- **Parallel-plate configuration requires additional steps for its implementation due to the electrode on the upper silicon cap**

ELECTRONIC READ-OUT SCHEME

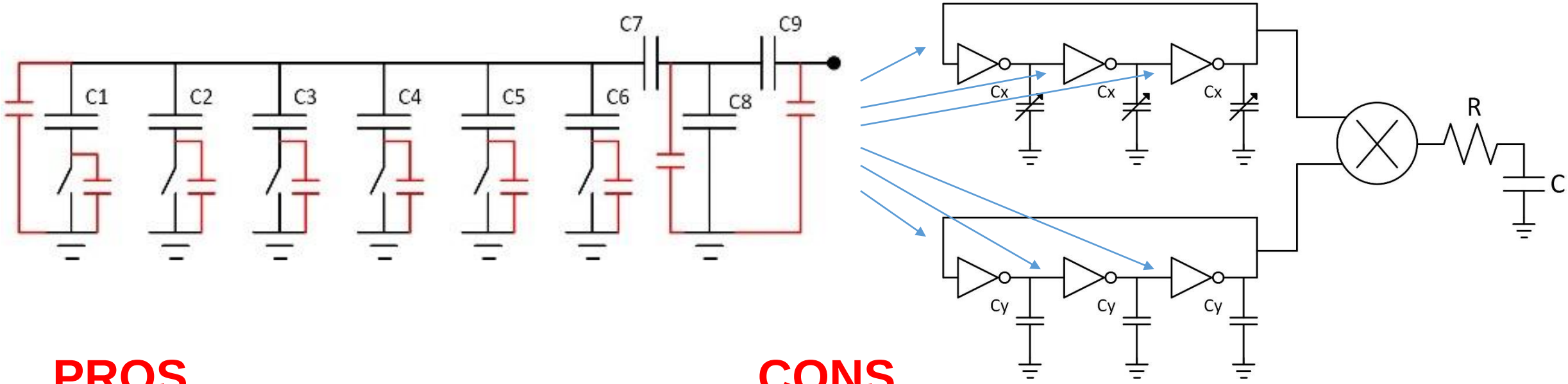

PROS

- Conceptually Simple
- Linear Transcharacteristic
- High resolution
- Low Area Employment
- Only two ROs, a Mixer and a RC filter

CONS

- High sensitivity to process tolerances

  ↓

  Necessity to re-tune oscillators through an appropriate circuitry

ELECTRONIC READ-OUT LAYOUT

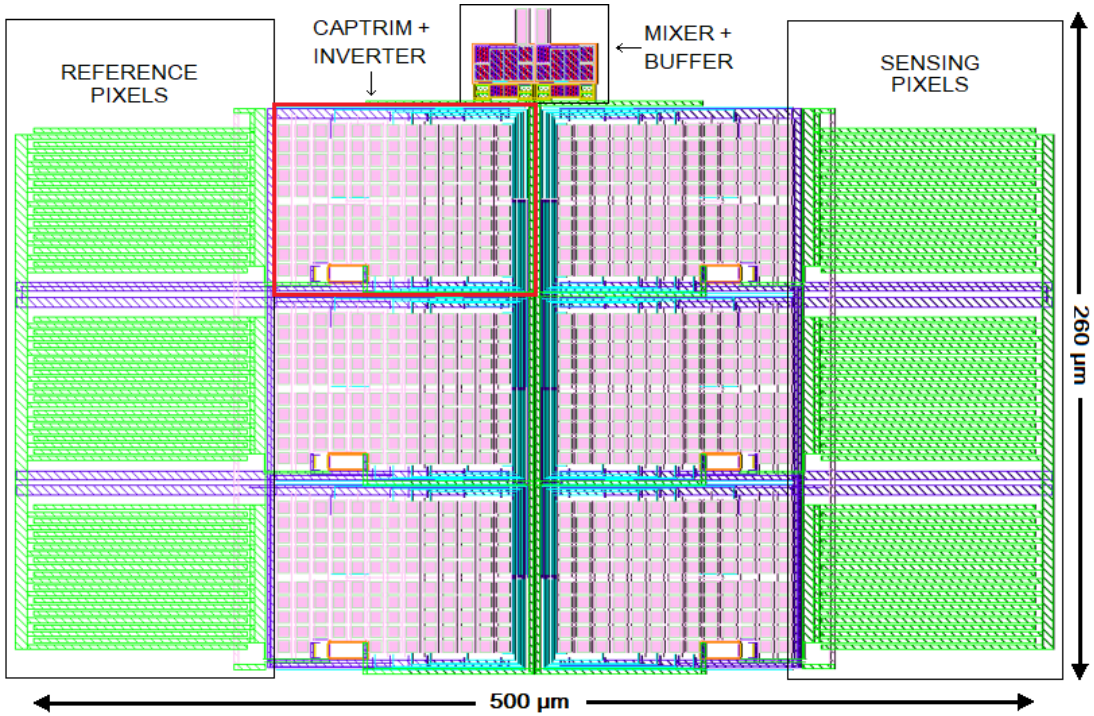

Main Parameters Table	
Process [nm]	130
Supply [V]	1.2
Single Oscillator Frequency [MHz]	79.9
Sensitivity [kHz/fF]	64
Area [mm²]	0.15
Power Dissipation [mW]	1.37

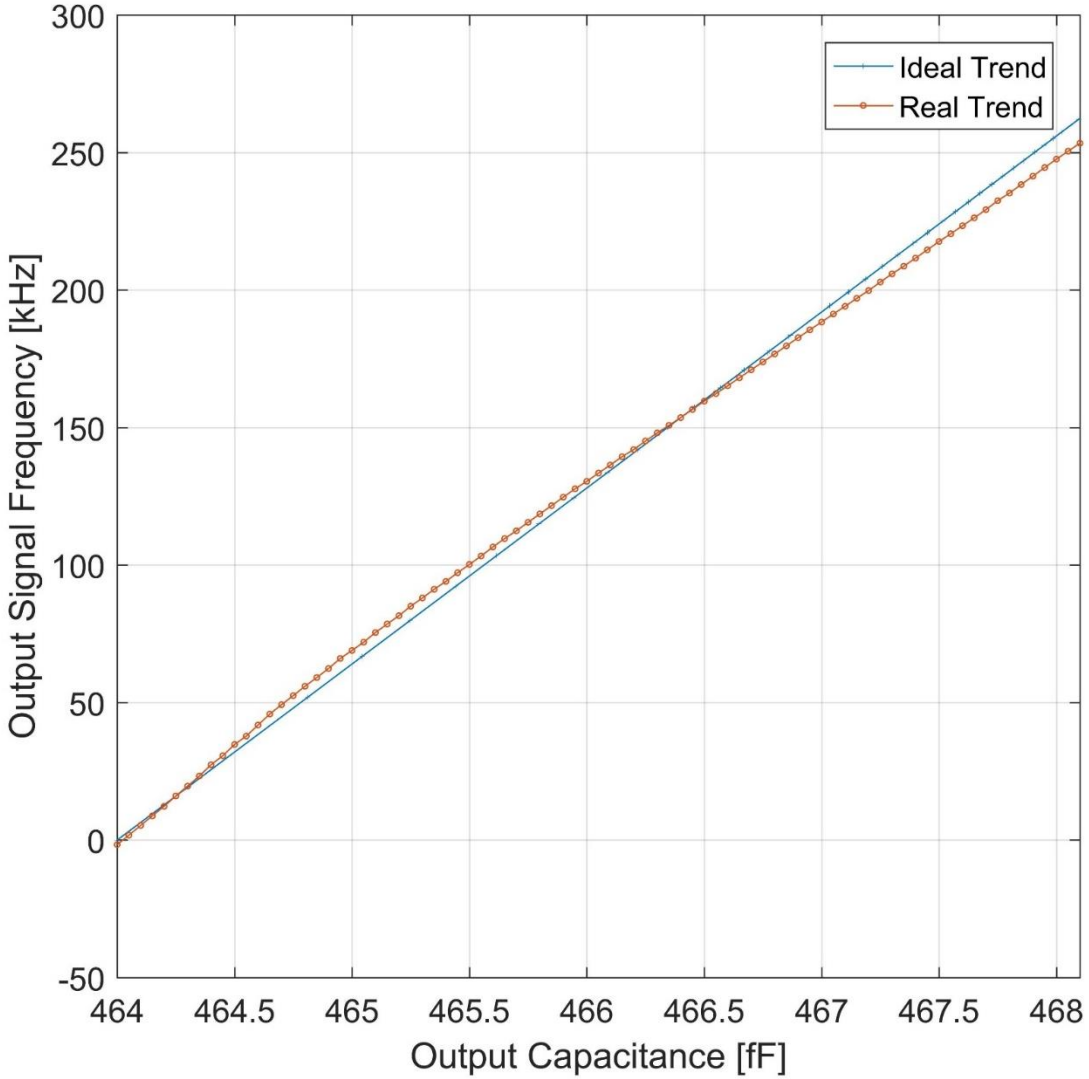

CONFERENCES AND PUBLICATIONS

SCHOOLS AND CONFERENCES

- Advanced PhD course on "High Resolution Electronic Measurements in Nano-Bio Science", Milano (Italy) April 8 - 12, 2019
- PhD school of the Società Italiana di Elettronica – 51st SIE 2019 Annual Meeting, Roma (Italy) June 24-28, 2019
- 26th IEEE International Conference on Electronics Circuits and Systems (ICECS), Genova (Italy) November 27-29, 2019

PAPERS

- U.Ferlito, A.D.Grasso, M.Vaiana, G.Bruno *"Integrated Airborne Particule Matter Detector"* ICECS 2019

THANK YOU FOR YOUR ATTENTION!!!